REV.	DESCRIPTION	DRAWN	CHECKED	APPROVED

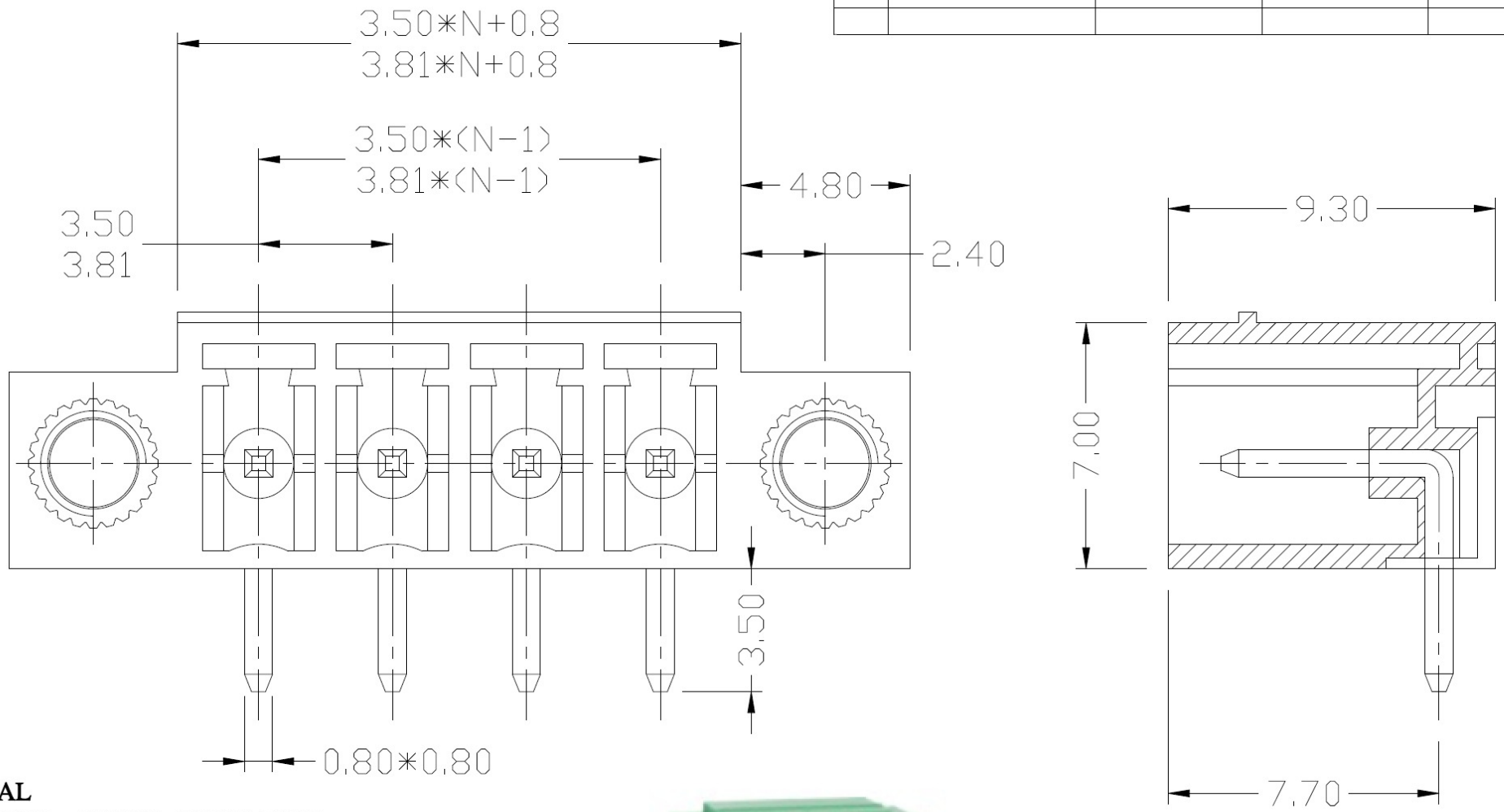

·MATERIAL
PIN HEADER : BRASS, TIN PLATED
HOUSING : PA66, UL94V-0
·ELECTRICAL
RATED VOLTAGD : 300V
RATED CURRENT : 8A
CONTACT RESISTANCE : 20mΩ
INSULATION RESISTANCE : 5000MΩ/1000V
WITHSTANDING VOLTAGE : AC1500V/1Min
·MECHANICAL
TEMP.RANGE : -40℃∽+105℃
MAX SOLDREING : +250℃, FOR 5 SEC.

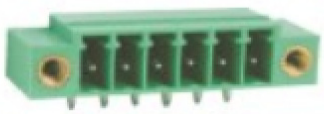

PRODUCT NUMBER CODE :

KF222 - 3.50R/3.81R - XXP
XX = Number of pole

GENERAL TOLERANCE		ANGLE TOLERANCE	
X.	±0.60	X.	±5°
.X	±0.38	.X	±3°
.XX	±0.25	.XX	±2°

DRAWING TYPE	COMPONENTS		
SCALE	1:1	SHEET	1 OF 1
DRAWING NO.			

PROJECTION		TITLE	KF222-3.50R/3.81R
UNITS	mm		
SHEET SIZE	A4	SERIES	F222

TOPTEK

Toptek s.r.l.
www.toptek-co.com